OPTIMUM 8

ELECTRIC SCISSOR LIFTS

Haulotte GROUP

TECHNICAL DATA

	Optimum 8
Working height	7.77 m
Platform height	5.77 m
Driveable at full height up to	5.77 m
Lift capacity - inside	230 kg
Lift capacity - outside	230 kg
A Platform length - outside	1.73 m
B Platform length - extended	2.59 m
Length - extension	0.86 m
C Platform width - outside	0.74 m
D Height - stowed	1.99 m
E Overall width	0.79 m
F Length	1.90 m
G Wheelbase	1.38 m
H Ground clearance - Center	8.7 cm
Ground clearance - Pothole guards deployed	2 cm
Drive speed	0.5 - 5 km/h
Gradeability	25 %
Tilt (lateral / longitudinal)	1.5° - 3 °
Lift / lower speed	20 s / 18 s
Turning radius - outside	1.5 m
Non-marking tires	12.5 x 4.13
Batteries	24 V - 105 Amph (C5)
Hydraulic system capacity	6 l
Weight	1 530 kg

Optimum 8

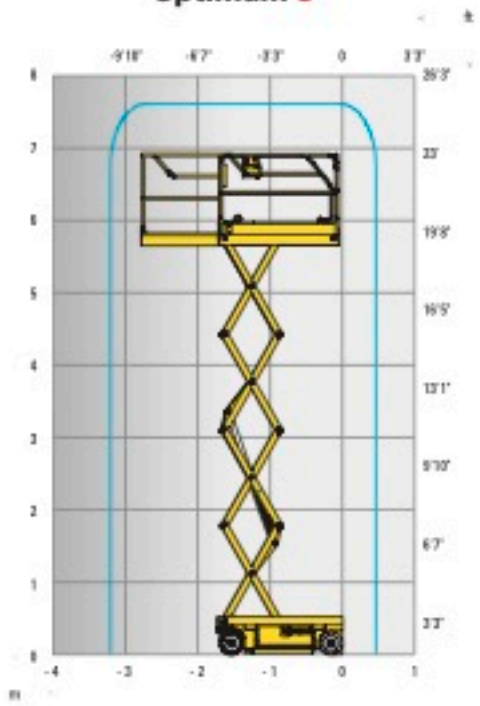

STANDARD EQUIPMENT

- 24 V electric drive Brushless AC motors
- 24 V - 105 Ah C5 batteries
- Battery charge indicator
- Battery level indicator on upper and lower control boxes
- Haulotte ACTIV'Screen (battery charge, Hourmeter, service alert & failures icons in code or in full text...)
- 2 swing out trays
- Lateral fork lifting pockets
- Electric or manual brake release system
- Lifting and tie down points
- Non marking tires

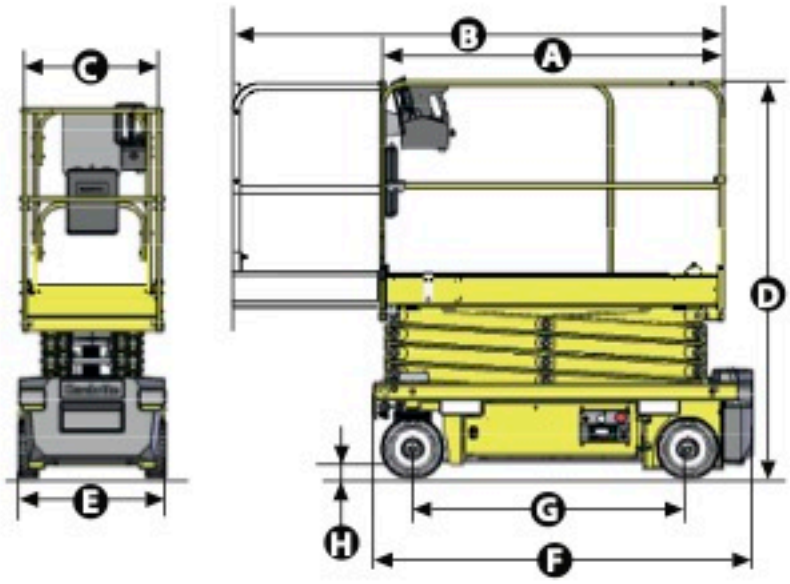

OPTIONS AND ACCESSORIES

- Maintenance free batteries
- Pipe cradle
- Swing door entry gate
- Flashing light
- Dual flashing lights
- Working light
- AC power to platform
- Additional battery cut-off
- Hydraulic oil for cold countries

Document non contractuel - Nous nous réservons le droit de modifier les caractéristiques techniques de ce document sans préavis - 2020/01

Haulotte Group - La Péronnière - BP 9 - 42152 l'Horme - France • Tel : +33 (0)4 77 29 24 24 - Fax : +33 (0)4 77 29 43 95 - haulotte@haulotte.com - www.haulotte.com