TECHNICAL SPECIFICATIONS

SV17Ex

Operating weight +-2% (EC Norms):
> 1805/1925 kg (canopy/cabin)

Transport weight +-2% (EC Norms):
> 1730/1850 kg (canopy/cabin)



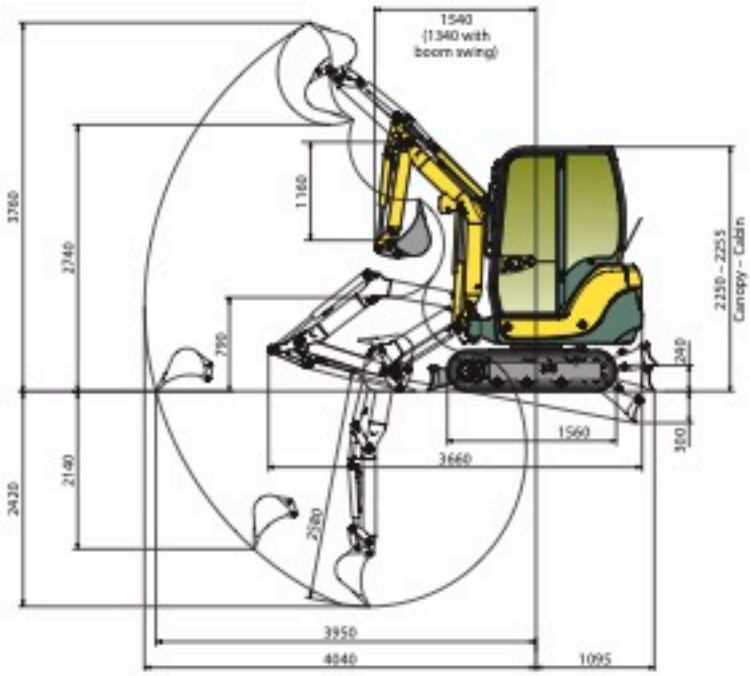

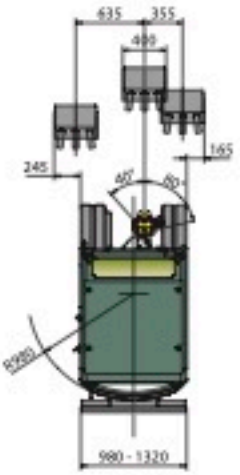

Subject to any technical modifications. Dimensions given in mm with standard Yanmar bucket.

Blade on ground

A	Maxi			3.0 m			2.5 m			2.0 m				
B	N	W		N	W		N	W		N	W			
2.5	*245	*245	*245	*235	*235	*235	-	-	-	-	-	-	-	
2.0	*260	210	*260	*235	*235	*235	*230	*230	*230	-	-	-	-	
1.5	*265	190	*265	*265	220	*265	*275	*280	*275	*300	*300	*300	-	
1.0	*275	180	*275	*290	220	*290	*335	285	*335	*435	*440	*435	-	
0.5	*290	180	*290	*335	210	*335	*400	270	*400	*535	375	*535	-	C
0	*310	185	*310	*350	210	*350	*445	280	*445	*600	360	*600	*820	
-0.5	*310	195	*310	*335	220	*335	*430	255	*430	*595	340	*595	*790	
-1.0	*320	225	*320	-	-	-	*406	275	*406	*580	355	*580	*760	
-1.5	*310	240	*310	-	-	-	-	-	-	*425	345	*425	*645	

Blade above ground

A	Maxi			3.0 m			2.5 m			2.0 m				
B	N	W		N	W		N	W		N	W			
2.5	*245	*245	*245	*235	*235	*235	-	-	-	-	-	-	-	
2.0	*260	210	*260	*235	*235	*235	*230	*220	*230	-	-	-	-	
1.5	*265	195	*265	*265	230	*265	*275	*270	*275	*300	*293	*300	-	
1.0	*275	185	*275	*290	225	*290	*335	280	*335	*435	*430	*435	-	
0.5	*290	185	*290	*335	215	*335	*400	275	*400	*535	375	*535	-	C
0	*310	190	*310	*350	215	*350	*445	275	*445	*600	366	*600	*820	
-0.5	*310	195	*310	*335	220	*335	*430	255	350	*595	340	460	*790	
-1.0	*320	225	*320	-	-	-	*406	265	415	*580	345	475	*760	
-1.5	*310	240	*310	-	-	-	-	-	-	*425	345	*425	*645	

The data contained in these tables represent the lifting capacity in accordance with ISO standard 10567. They don't include the weight of the bucket and correspond to 75% of the maximum static tipping load or 87 % of the hydraulic lifting power. Data marked * are the hydraulic limits of the lifting power.

Machine with cabin, rubber crawlers, without bucket.

A: Overhang from rotational axis (m).
B: Height of hooking point (m).
C: Safe working load (kg).
N: Retracted undercarriage.
W: Extended undercarriage.
(- 4 % with canopy)

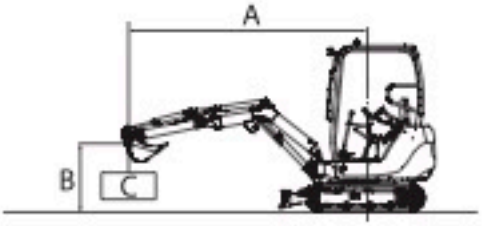

Tipping load, rating over front

Tipping load, rating over side 90°