HA16 RTJ / HA16 RTJ 0

ROUGH TERRAIN ARTICULATING BOOMS

Haulotte GROUP

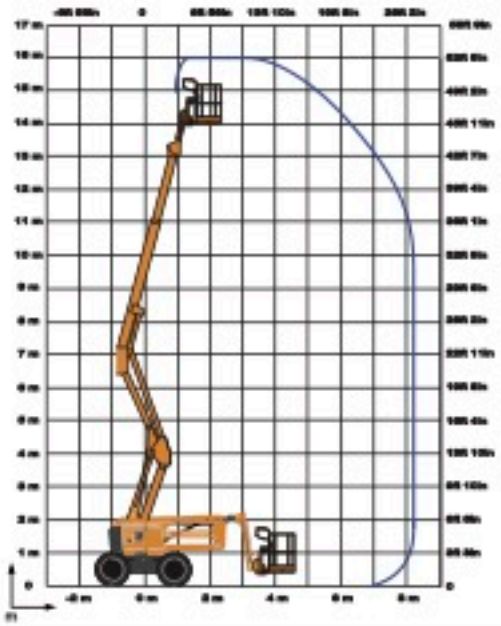

TECHNICAL DATA

	HA16 RTJ 4WD / 2WS	HA16 RTJ O 4WD / 2WS Front oscillating axle
Working height	16 m	
Platform height	14 m	
Horizontal outreach	8.3 m	
Up and over clearance	7.65 m	
Lift capacity	230 kg (2 persons)	
F x G Platform size	1.83 x 0.80 m	
A Length - stowed	6.75 m	
H Transport length (jib tucked under)	5.05 m	
B Width	2.3 m	
C Height - stowed	2.3 m	
I Transport height	2.4 m	
Jib length	1.2 m	
Vertical jib rotation	140° (-80°/+60°)	
Platform rotation	165° (-75°/+90°)	
Turntable rotation	355° non continuous	
D Wheelbase	2.1 m	
E Ground clearance	38 cm	
Tilt	5 °	
Drive speed	Up to 5.6 km/h	
Gradeability	40 %	
Turning radius - outside	4.5 m	
Tires cured on solid Rough Terrain	14x17.5	
Power source	Kubota 26 kW - 35 hp	
Hydraulic system capacity	76 l	
Fuel tank capacity	62 l	
Weight	6 200 kg	6 600 kg

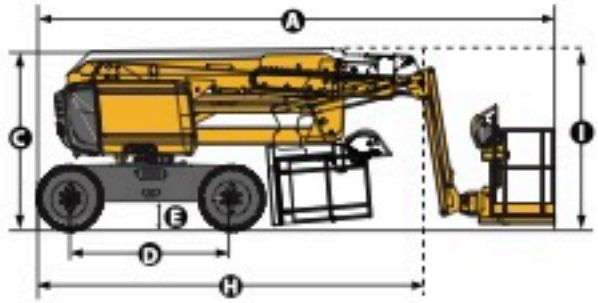

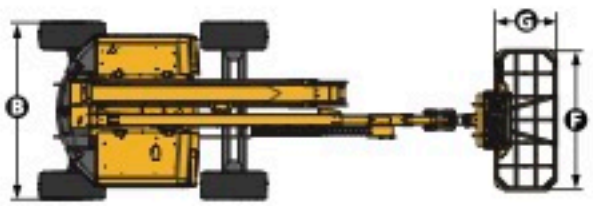

STANDARD EQUIPMENT

- 4 wheel drive
- 2 wheel steer
- Front oscillating axle (RTJ O) increases stability on uneven ground
- Permanent limited slip differential
- 230 kg (2 persons) load capacity
- 4 simultaneous movements for maximum productivity
- Safe to use in winds up to 60km/h - 37mph
- Rotating beacon
- Modular standard basket 1.83 m x 0.80 m, quick & easy to repair
- Drop bar entry gate
- Upper control box cover
- Tool tray
- AC power to platform (110/230V)
- Self-diagnosis tool on lower control box
- Swing out engine tray for ease of maintenance
- Hour meter
- Low fuel level indicator (upper & lower control boxes)
- Engine pre-heater with light indicator
- Sound and light alarm for tilt and load
- 12 V battery / electrical control system
- Electric pump system and emergency descent
- Travel alarm

OPTIONS AND ACCESSORIES

- Modular large basket 2.44 m x 0.91 m quick and easy to repair
- Lateral swing door entry gate
- Hydraulic generator Dynaset 3.5Kw
- Air-line to platform 6.5 mm inner diameter
- 70W working light
- Power to platform (Female plug in the basket with or without circuit-breaker 30mA)
- Flashing light
- Cold weather kit : -10°C /-25°C
- Hot weather kit : hydraulic oil cooler + hydraulic oil
- Biodegradable hydraulic oil
- Large cured on solid Rough terrain tires 385/65
- Non-marking tires 14x17.5
- Haulotte Activ'Shield© Bar : Exclusive secondary guarding device
- Catalytic exhaust for diesel engine
- Spark arrestor and electric one-way valve
- Battery cut-off

Haulotte Group - La Péronnière - BP 9 - 42152 l'Horme - France • Tel: +33 (0)4 77 29 24 24 - Fax: +33 (0)4 77 29 43 95 - haulotte@haulotte.com - www.haulotte.com