PIAF 810

Mast boom lift PIAF 810



www.atnplatforms.com

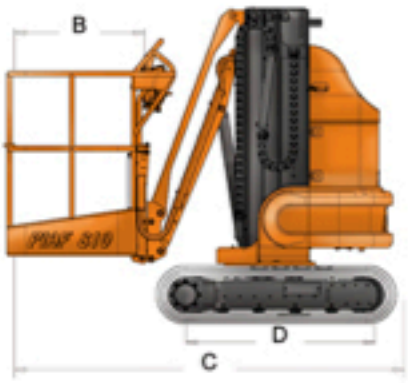



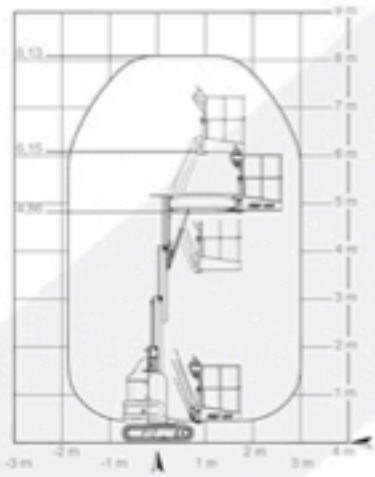

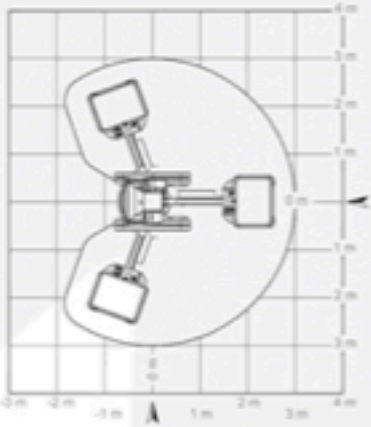

PIAF 810 on tracks

ADVANTAGES OF PIAF 810

- Efficiency thanks to the 2 x 110° rotation of the top.
- Designed for any indoor or outdoor job site.
- Smooth operating thanks to the hydraulic joystick.
- Easy to operate.
- Zero turnning radius.
- Preserving fragile floors.
- Designed and manufactured for heavy-duty use.

STANDARD FEATURES

- Non-marking rubber tracks.
- Progressive hydraulic joystick transmission.
- Driving operated by a hydraulic joystick.
- 575 Ah 24 V centralized battery filling system.
- 85 A battery charger.
- 2 drive speeds.
- Lifting facilities.
- Emergency hand-pump.
- Battery indicator with 80% discharge cut-off.
- Tilt indicator with buzzer.
- Overload sensor.
- System preventing from tipping over.
- Hour meter.
- Strong large size platform.

OPTIONS

- Air line to platform.
- 220V AC power to platform.
- Automatic power cut-off if tilt value >5°.
- Flashing light.
- Motion alarm.
- Special paint colour(s).

		PIAF 810
	Working height	8,10 M (26 ft. 6,91 in.)
	Platform height	6,10 M (20 ft. 0,16 in.)
	Horizontal reach	3,00 M (9 ft. 10,11 in.)
	Lift capacity	200 Kg (441 lbs.)
	Turntable rotation	2x110 °
A	Platform width	0,90 M (2 ft. 9,5 in.)
B	Platform length	0,80 M (2 ft. 6,2 in.)
E	Width	1,20 M (3 ft. 11,24 in.)
C	Length- stowed	2,47 M (8 ft. 10,25 in.)
F	Height - stowed	1,98 (6 ft. 6,49 in.)
D	Wheelbase	1,20 M (3 ft. 11,24 in.)
	Drive speed - stowed	1,8 Km/h (1,12 Mph)
	Drive speed - raised	0,8 Km/h (0,50 Mph)
	Turning radius	0
	Gradeability - stowed	30 %
	Maximum tilt value	5 %
	Weight	2200 Kg (4851 lbs.)
	Max.ground bearing pressure	0,5 Kg/cm2 (7 psi / in.²)

CE This product complies with European regulations in force (EN 280). Due to our constant improvement policy, ATN reserves the right to make any modifications without any prior notice.

ATN
Rue André Thevet,
Z.I.Guillaume Mon Amy Faullet 47400 FRANCE
+33 (0) 553 798 320 +33 (0) 553 880 107
http://www.atnplatforms.com



Copyright ATN 01/2014 FTATN0004-04en